FBV INC.
Engineered Solutions

BUTTERFLY VALVE

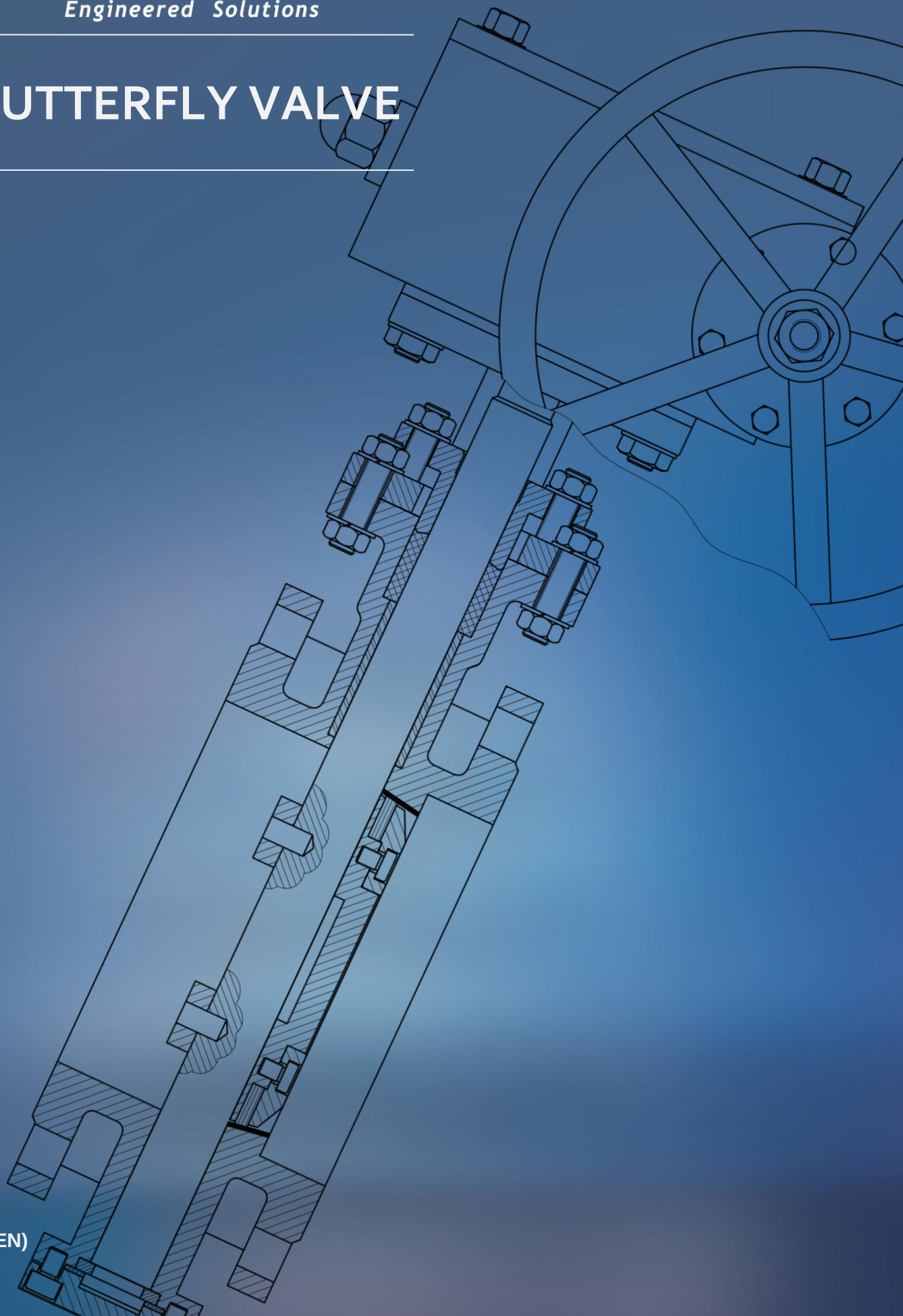

BU-1601C(EN)

ABOUT US

FBV Inc. is an ISO 9001 certified company specializing in manufacturing industrial valves including ball valves, gate valves, globe valves, check valves, plug valves and butterfly valves in carbon steel, stainless steel, duplex stainless and alloy materials. Our products conform to the latest industry standards in accordance to ANSI, ASME and API.

FBV today has over 600,000 square feet of manufacturing facilities. Through its conviction to provide only the finest quality products and services to match the need of our customers, FBV has now established itself as a serious player in the valve business.

FBV INC has sold worldwide in North America, Europe, South America, South Asia, Africa and the Middle East. We consider product quality and customer satisfaction as our highest priority. We look forward to new customer relationships by providing value, quality, customer service, honesty, integrity and the commitment to maintain product consistency with each and every order.

MISSION STATEMENT

We at FBV, Inc. commit to taking ACTION:

- Adopt the latest technology to take the product quality to the next level;
- Consistently provide on-time services to our customers;
- Train and develop talented people with strong work ethics to deliver effective performance;
- Improve and enhance engineering designs to ensure product performance;
- Optimize management systems and increase productivity;
- Never forget our customer and employee needs.

Engineered Solutions®

BUTTERFLY VALVE

TABLE OF INDEX — *PAGE*

Introduction, *Features*	*3*
Scope of Products,	*4*
Overview Triple Offset Type	*5-6*
Dimensions and Weights	7
Class 150 (PN 20)	*7-8*
Class 300 (PN 50)	*9*
Class 600 (PN 100)	*10*
Class 900 /1500(PN 150/250)	*10-11*
Flow-Coefficient CV Value (Triple Offset Type)	*12*
Overview Concentric Lining Type	13
Dimensions and Weights	*14*
Class 150 (PN 20)	*14*
Flow-Coefficient CV Value(Concentric Lining Type)	*15*
Seat and Seal Material, *Selection Guide*	*16*
Valve Figure Number, *How To Order*	*17-18*

Engineered Solutions

This page is intentionally left blank.

BUTTERFLY VALVE

Offset Metal Sealing Butterfly Valve

FBV Offset metal sealing butterfly valve uses the three eccentric structure with multi-layer metal seal or pure metal sealing ring, different sealing materials are being used according to the different temperature request from end user.

The structure of valve sealing ring that was formed after machining for triple eccentric butterfly valve is oblique cone type, the purpose of which is to let the disc open in a subtle angle and seat sealing surface can be completely separated from the sealing surface of disc, thus to reduce the friction of sealing surface during the open and close.

INTRODUCTION

Butterfly valve uses a stem through an approximate circular plate of the disc and the valve stem rotation to drive the rotation of the disc, in order to control the effect of fluid switch.

FBV produces triple offset metal sealing and concentric Lining butterfly valve.

Concentric Lining Butterfly Valve

Concentric Lining butterfly valve adopts lining on all the parts that contact with medium inside of body, the stainless steel which is resistance of corrosion is used as stem and disc to ensure the corrosion resistance of different strong corrosive medium.

The valve body and disc materials can be made of cast iron, carbon steel or stainless steel to ensure the bearing strength. Many kinds of soft sealing material such as NBR, EPDM or PTFE etc can be used as lining material to adapt to different corrosive medium or working temperature.

SCOPE OF PRODUCTS

Legends: **A** –Triple Offset & Concentric Lining Type
B–Available in Triple Offset Only
C–Available in Concentric Lining Type Only
D– Not Usually Required

Size in/mm	Class 150 PN 20	Class 300 PN 50	Class 600 PN 100	Class 900 PN 150	Class 1500 PN 250
2 *50*	A	B	B	B	B
3 *65*	A	B	B	B	B
4 *80*	A	B	B	B	B
5 *100*	A,D	B,D	B,D	B,D	B,D
6 *150*	A	B	B	B	B
8 *200*	A	B	B	B	B
10 *250*	A	B	B	B	B
12 *300*	A	B	B	B	B
14 *350*	A	B	B	B	B
16 *400*	A	B	B	B	B
18 *450*	A	B	B	B	B
20 *500*	A	B	B	B	B
22 *550*	A,D	B,D	B,D	B,D	B,D
24 *600*	A	B	B	B	B
26 *650*	A	B	B	B	B
28 *700*	A,D	B,D	B,D	B,D	B,D
30 *750*	A	B	B	B	B
32 *800*	A,D	B,D	B,D	B,D	B,D
34 *850*	A,D	B,D	B,D	B,D	B,D
36 *900*	A	B	B	B	B
38 950	A,D	B,D	B,D	B,D	
40 1000	A	B	B	B	
42 1050	A	B	B	B	
48 1200	A	B	B	B	
56 1400	A	B	B	B	
60 1500	A	B	B	B	

1. Concentric Lining Butterfly valve is applicable to the pressure rating not higher than class 150, but not limit to CL150. CL125, CL75, PN10 and PN16 can be an option.

2. Above are the dimensions that normally used, contact our sales representative if any other sizes are requested.

BUTTERFLY VALVE

OVERVIEW (Triple Offset Type)

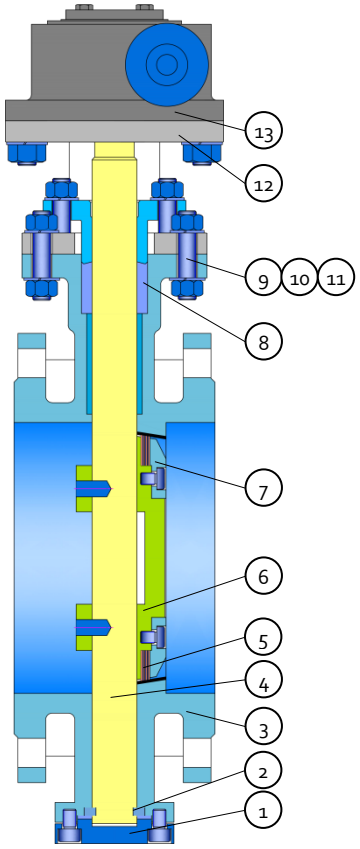

Part List

1	Cover
2	Segment
3	Body
4	Stem
5	Seal Ring
6	Disc
7	Plate
8	Packing
9	Stud
10	Nut
11	Washer
12	Yoke
13	Gear

STANDARDS

Design & Manufacture	API 609,ASME b16.34
Face-to-face	API 609, ASME B16.10
End Dimension	ASME B16.5 (RF, RTJ), ASME B16.47 (RF,RTJ) MSS SP-44 (NPS 22 Only) ASME B16.25 (BW)
Test & inspection	API 598

TYPICAL MATERIALS

Body, Disc	A216 WCB,A217 WC6, WC9, A351 CF_3, CF8, CF_3M, CF8M, A995 4A, 5A, A352 LCB, LCC, LC2, Monel, Inconel, Hastelloy (Casting)
Seat	13Cr/SS304/SS316+Composite materials, P
Stem	A276 410, 304, 316, F51, AISI 4140+ENP, 17-4PH
Packing	Graphite, PTFE
O-ring	NBR, HNBR,FKM

Typical Triple Offset Butterfly Valve

Wafer Type

Lug Type

Flange Type

Butt Welding Type

OVERVIEW (Triple Offset Type)

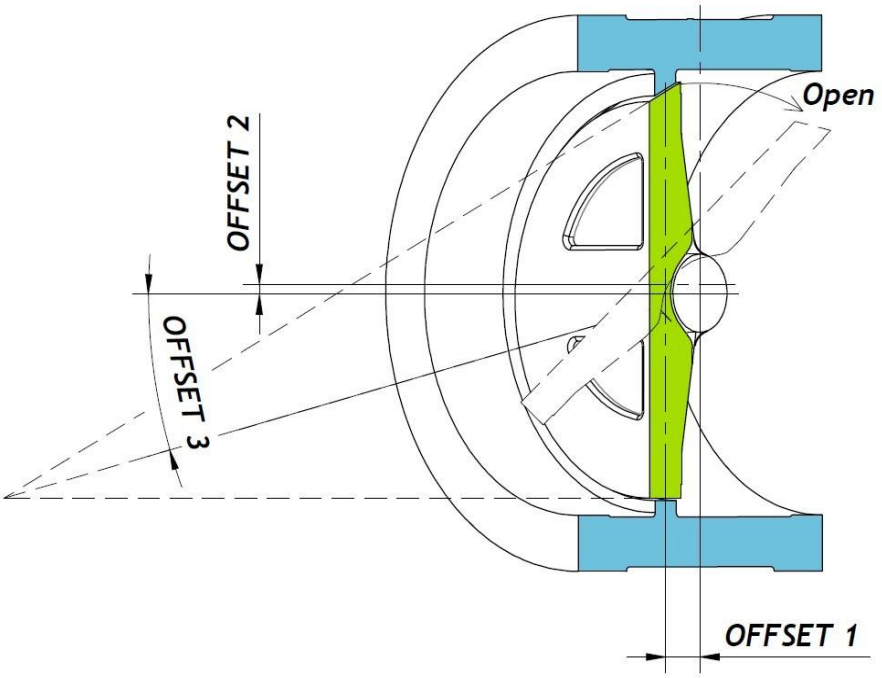

Offset 1: Offset for seat seal and the rotation center of stem.

Offset 2: Center of pipe and disc.

Offset 3: Seat sealing angle center line and flow passage center.

The triple offset of butterfly valve ensures the valve disc is completely separated from seat sealing surface while open in a slightly angle which could reduce the friction of sealing surface during open and close and opening torque as well as prolong the service life of the sealing surface.

FBV metal sealing butterfly valve adopts multi-layer sealing ring to achieve the valve seal, the multi-layer seal ring is generally made of stainless steel and graphite combination

The pure metal sealing can be used for special medium or high temperature.

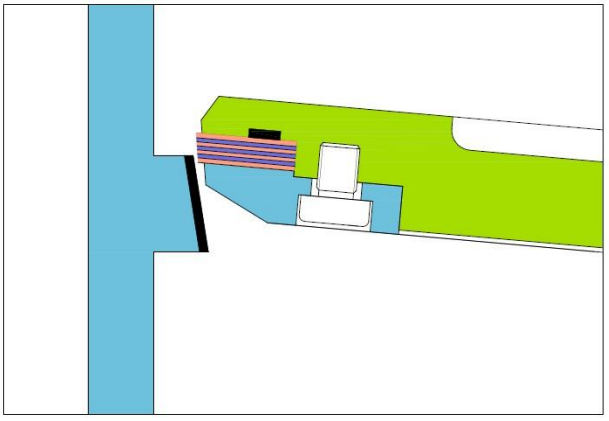

Disc Slightly open

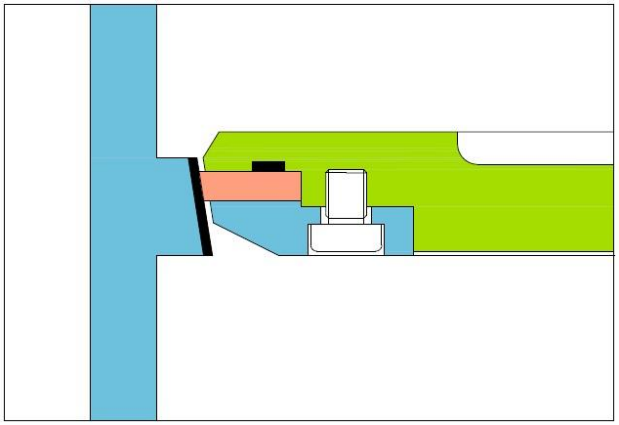

Disc closed: Pure metal seat ring

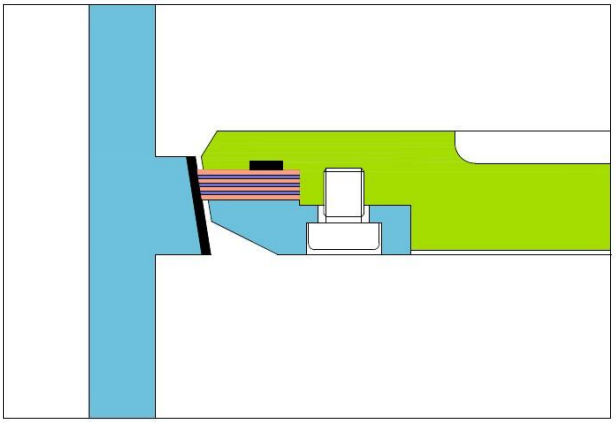

Disc closed: Multi-layer metal seat ring

DIMENSIONS AND WEIGHTS (Triple Offset Type) *ASME CLASS 150 (PN 20)*

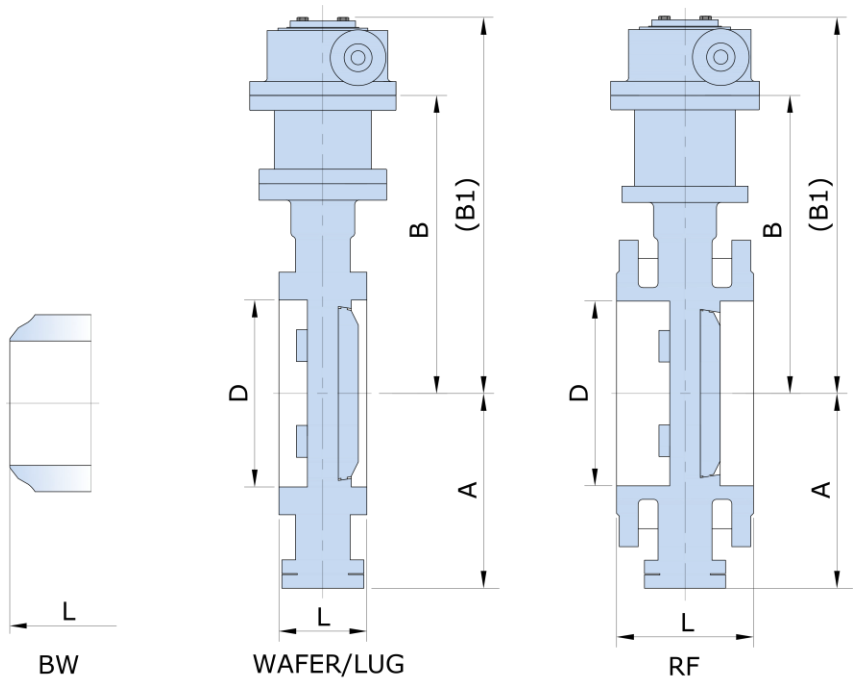

ASME CLASS 150 (PN 20)

Size *in/mm*	D	L			A	B	B1	Weight *(lb/kg)*			
		WAFER /LUG	RF(1)	BW				WAFER	*LUG*	*RF*	*BW*
2	2	*1.69*	*4.25*	-	*4.33*	*7.87*	*13.78*	*18*	*22*	*31*	
50	*50*	*43*	*108*		*110*	*200*	*350*	*8*	*10*	*14*	
2 ½	2 ½	*1.81*	*4.41*	-	*4.92*	*8.46*	*14.37*	*20*	*24*	*35*	
65	*65*	*46*	*112*		*125*	*215*	*365*	*9*	*11*	*16*	
3	3	*1.89*	*4.5*	*7.09*	*5.12*	*8.86*	*14.76*	*22*	*26*	*40*	*33*
80	*80*	*48*	*114*	*180*	*130*	*225*	*375*	*10*	*12*	*18*	*15*
4	4	*2.13*	*5*	*7.48*	*5.71*	*9.45*	*15.35*	*26*	*40*	*51*	*44*
100	*100*	*54*	*127*	*190*	*145*	*240*	*390*	*12*	*18*	*23*	*20*
6	6	*2.24*	*5.51*	*8.27*	*6.89*	*11.42*	*17.32*	*33*	*53*	*70*	*55*
150	*150*	*57*	*140*	*210*	*175*	*290*	*440*	*15*	*24*	*32*	*25*
8	8	*2.52*	*5.98*	*9.06*	*9.65*	*13.39*	*19.29*	*66*	*99*	*106*	*108*
200	*200*	*64*	*152*	*230*	*245*	*340*	*490*	*30*	*45*	*48*	*49*
10	10	*2.8*	*6.5*	*9.84*	*11.02*	*14.76*	*20.67*	*104*	*150*	*194*	*156*
250	*250*	*71*	*165*	*250*	*280*	*375*	*525*	*47*	*68*	*88*	*71*
12	12	*3.19*	*7*	*10.63*	*12.4*	*16.73*	*22.64*	*174*	*220*	*282*	*229*
300	*300*	*81*	*178*	*270*	*315*	*425*	*575*	*79*	*100*	*128*	*104*
14	14	*3.62*	*7.48*	*11.42*	*13.78*	*17.91*	*24.41*	*185*	*267*	*348*	*317*
350	*350*	*92*	*190*	*290*	*350*	*455*	*620*	*84*	*121*	*158*	*144*
16	16	*4.02*	*8.5*	*12.2*	*14.96*	*19.5*	*27.56*	*308*	*385*	*491*	*396*
400	*400*	*102*	*216*	*310*	*380*	*495*	*700*	*140*	*175*	*223*	*180*
18	18	*4.5*	*8.74*	*13*	*15.55*	*20.08*	*29.13*	*412*	*500*	*630*	*511*
450	*450*	*114*	*222*	*330*	*395*	*510*	*740*	*187*	*227*	*286*	*232*
20	20	*5*	*9.02*	*13.78*	*17.13*	*22.05*	*32.09*	*500*	*577*	*744*	*599*
500	*500*	*127*	*229*	*350*	*435*	*560*	*815*	*227*	*262*	*338*	*272*
24	24	*6.06*	*10.51*	*15.35*	*19.5*	*25*	*34.06*	*782*	*782*	*1126*	*914*
600	*600*	*154*	*267*	*390*	*495*	*635*	*865*	*355*	*355*	*511*	*415*
28	28	*6.5*	*11.5*	*16.93*	*19.69*	*25.59*	*35.83*	*1156*	*1156*	*742*	*1333*
700	*700*	*165*	*292*	*430*	*500*	*650*	*910*	*525*	*525*	*337*	*605*
32	32	*7.48*	*12.52*	*18.5*	*21.65*	*28.15*	*39.57*	*1542*	*1718*	*2562*	*1586*
800	*800*	*190*	*318*	*470*	*550*	*715*	*1005*	*700*	*780*	*1163*	*720*
36	36	*8*	*13*	*20.08*	*24.8*	*32.09*	*42.70*	*2379*	*2313*	*3450*	*2048*
900	*900*	*203*	*330*	*510*	*630*	*815*	*1110*	*1080*	*1050*	*1566*	*930*
40	40	*8.5*	*16.14*	*21.65*	*26.77*	*34.65*	*47.24*	*2907*	*3458*	*4692*	*3678*
1000	*1000*	*216*	*410*	*550*	*680*	*880*	*1200*	*1320*	*1570*	*2130*	*1670*
48	48	*10*	*18.5*	*24.8*	*31.3*	*39.17*	*52.56*	*4515*	*5066*	*7180*	*5727*
1200	*1200*	*254*	*470*	*630*	*795*	*995*	*1335*	*2050*	*2300*	*3260*	*2600*
56	56	*15.35*	*20.87*	-	*35.43*	*45.47*	*74.41*	*6825*	*7269*	*10352*	*8370*
1400	*1400*	*390*	*530*		*900*	*1155*	*1890*	*3100*	*3300*	*4700*	*3800*

1.The dimension and weights are for reference only and subject to change without notice.
2. For more size or dimensional information, please contact our sales representative.

Engineered Solutions

DIMENSIONS AND WEIGHTS (Triple Offset Type) *ASME CLASS 150 (PN 20)*

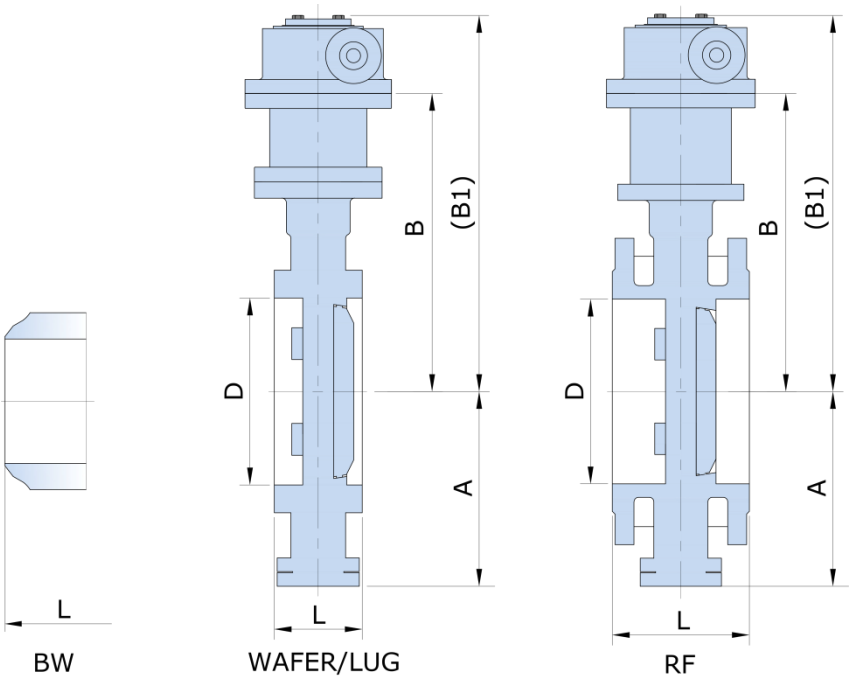

ASME CLASS 150 (PN 20) Continue

Size *in/mm*	D	L			A	B	B1	Weight *(lb/kg)*			
		WAFER /LUG	RF(1)	BW				WAFER	*LUG*	*RF*	*BW*
60 1500	60 1500	15.35 390	20.87 530	20.87 530	36.61 930	46.46 1180	75.6 1920	9251 4200	7489 3400	10573 4800	8590 3900
72 1800	72 1800	28.14 432	22.64 575	22.64 575	39.37 1000	51.18 1300	85.83 2180	12555 5700	11894 5400	14317 6500	11233 5100
76 1900	76 1900	15.95 456	24 610	24 610	45.67 1160	52.36 1330	92.52 2350	14537 6600	14978 6800	18282 8300	15859 7200
80 2000	80 2000	20.08 510	26.38 670	26.38 670	51.18 1300	55.12 1400	98.43 2500	15859 7200	16960 7700	19383 8800	16520 7500

Engineered Solutions

DIMENSIONS AND WEIGHTS (Triple Offset Type) *ASME CLASS 300 (PN 50)*

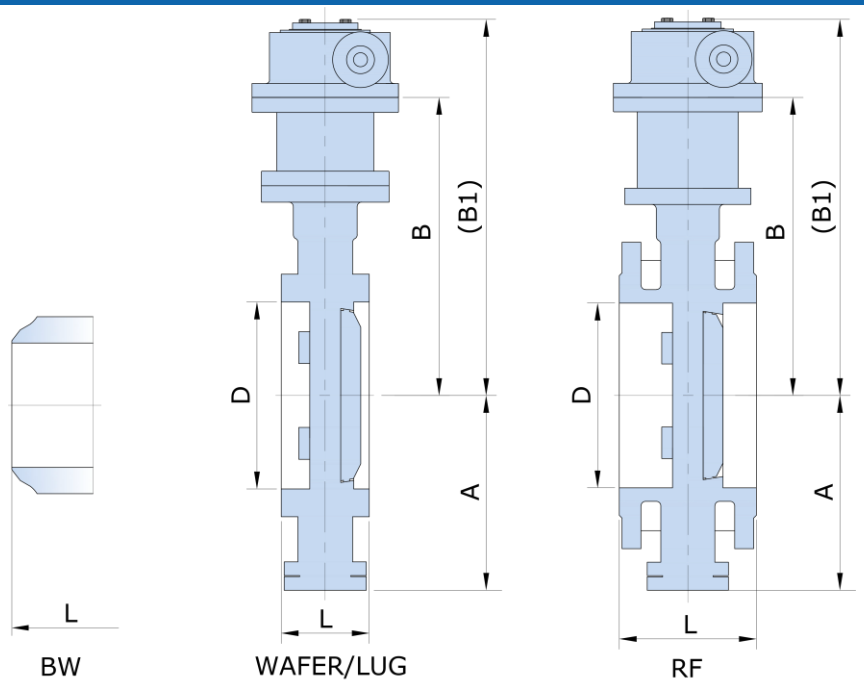

ASME CLASS 300 (PN 50)

Size *in/mm*	D	L			A	B	B1	Weight *(lb/kg)*			
		WAFER/ LUG	RF(1)	BW				WAFER	LUG	RF	BW
2 *50*	2 *50*	*1.69* *43*	*5.91* *150*	-	*4.53* *115*	*7.87* *200*	*13.98* *355*	*26* *12*	*29* *13*	*31* *14*	
2 ½ *65*	2 ½ *65*	*1.81* *46*	*6.69* *170*	-	*4.92* *125*	*9.84* *250*	*14.57* *370*	*29* *13*	*31* *14*	*37* *17*	
3 *80*	3 *80*	*1.89* *48*	*7.09* *180*	*7.09* *180*	*5.31* *135*	*9.06* *230*	*14.96* *380*	*31* *14*	*35* *16*	*44* *20*	*37* *17*
4 *100*	4 *100*	*2.13* *54*	*7.48* *190*	*7.48* *190*	*6.1* *155*	*10.04* *255*	*15.75* *400*	*44* *20*	*51* *23*	*66* *30*	*55* *25*
6 *150*	6 *150*	*2.32* *59*	*8.27* *210*	*8.27* *210*	*8.46* *215*	*13* *330*	*18.11* *460*	*93* *42*	*99* *45*	*128* *58*	*110* *50*
8 *200*	8 *200*	*2.87* *73*	*9.06* *230*	*9.06* *230*	*9.84* *250*	*14.57* *370*	*19.69* *500*	*132* *60*	*145* *66*	*181* *82*	*156* *71*
10 *250*	10 *250*	*3.27* *83*	*9.84* *250*	*9.84* *250*	*11.42* *290*	*16.73* *425*	*21.26* *540*	*242* *110*	*264* *120*	*322* *146*	*286* *130*
12 *300*	12 *300*	*3.62* *92*	*10.63* *270*	*10.63* *270*	*12.8* *325*	*17.91* *455*	*23.23* *590*	*300* *136*	*326* *148*	*577* *262*	*352* *160*
14 *350*	14 *350*	*4.61* *117*	*11.42* *290*	*11.42* *290*	*14.17* *360*	*19.69* *500*	*25.20* *640*	*427* *194*	*467* *212*	*771* *350*	*502* *228*
16 *400*	16 *400*	*5.24* *133*	*12.20* *310*	*12.2* *310*	*14.37* *365*	*21.26* *540*	*28.35* *720*	*581* *264*	*630* *286*	*907* *412*	*678* *308*
18 *450*	18 *450*	*5.87* *149*	*13* *330*	*13* *330*	*15.55* *395*	*20.08* *510*	*29.13* *740*	*617* *280*	*722* *328*	*1222* *555*	*789* *358*
20 *500*	20 *500*	*6.26* *159*	*13.78* *350*	*13.78* *350*	*18.5* *470*	*25.59* *650*	*22.86* *860*	*914* *415*	*991* *450*	*1674* *760*	*1068* *485*
24 *600*	24 *600*	*7.13* *181*	*15.35* *390*	*15.35* *390*	*21.46* *545*	*28.94* *735*	*35.43* *900*	*1198* *544*	*1317* *598*	*2610* *1185*	*1346* *652*
28 *700*	28 *700*	*9.02* *229*	*16.93* *430*	*16.93* *430*	*21.65* *550*	*30.71* *780*	*35.83* *910*	*1861* *845*	*2037* *925*	*3282* *1490*	*2236* *1015*
32 *800*	32 *800*	*9.5* *241*	*18.5* *470*	*18.5* *470*	*24.8* *630*	*33.66* *855*	*41.34* *1050*	*2621* *1190*	*2885* *1310*	*3678* *1670*	*3150* *1430*
36 *900*	36 *900*	*9.5* *241*	*20.08* *510*	*20.08* *510*	*26.97* *685*	*35.83* *910*	*45.28* *1150*	*3797* *1724*	*4137* *1878*	*5154* *2340*	*4471* *2030*
40 *1000*	40 *1000*	*11.81* *300*	*21.65* *550*	*21.65* *550*	*30.71* *780*	*39.37* *1000*	*49.61* *1260*	*5339* *2424*	*5790* *2628*	*7137* *3240*	*6238* *2832*
48 *1200*	48 *1200*	*14.17* *360*	*24.8* *630*	*21.8* *630*	*34.45* *875*	*44.88* *1140*	*55.12* *1400*	*6436* *2922*	*7070* *3210*	*8998* *4085*	*7700* *3496*

1. The dimension and weights are for reference only and subject to change without notice.
2. For more size or dimensional information, please contact our sales representative.

DIMENSIONS AND WEIGHTS (Triple Offset Type) — *ASME CLASS 600/900 (PN 100/150)*

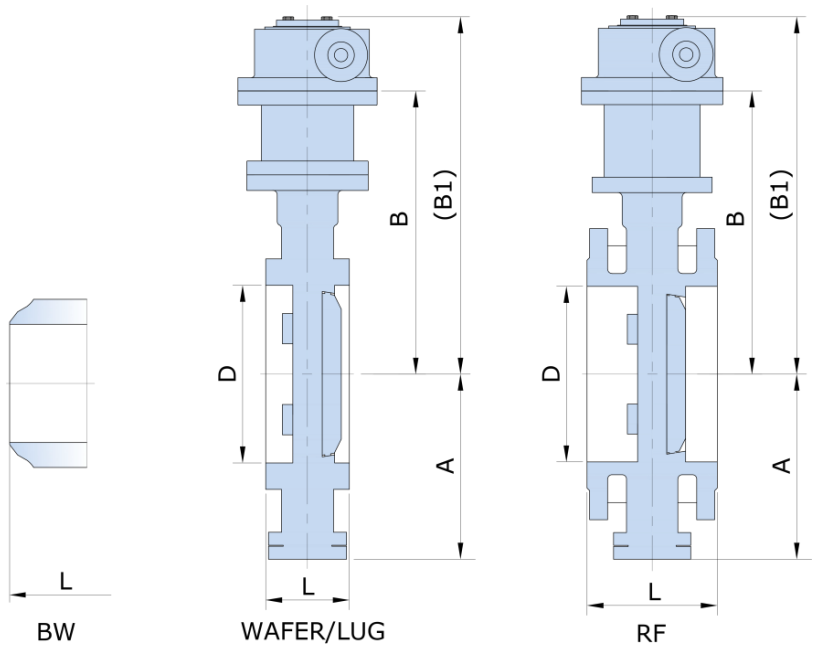

ASME CLASS 600 (PN 100)

Size *in/mm*	D	L			A	B	B1	Weight *(lb/kg)*			
		WAFER / LUG	RF	BW				WAFER	LUG	RF	BW
6	6	3.07	8.27	8.27	9.84	13.98	21.46	163	178	229	196
150	150	78	210	210	250	355	545	74	81	104	89
8	8	4.02	9.06	9.06	11.42	16.14	24.41	295	383	405	350
200	200	102	230	230	290	410	620	134	174	184	159
10	10	4.49	9.84	9.84	13.19	17.91	26.38	478	524	661	568
250	250	114	250	250	335	455	670	217	238	300	258
12	12	5.51	10.63	10.63	14.96	20.87	29.92	645	705	870	762
300	300	140	270	270	380	530	760	293	320	395	346
14	14	6.10	11.42	11.42	15.35	21.65	30.32	722	793	1007	866
350	350	155	290	290	390	550	770	328	360	457	393
16	16	7.01	12.20	12.20	17.52	24.61	35.04	1046	1145	1443	1244
400	400	178	310	310	445	625	890	475	520	655	565
18	18	7.87	13	13	18.7	26.18	38.19	1247	1374	1756	1502
450	450	200	330	330	475	665	970	566	624	797	682
20	20	8.5	13.78	13.78	20.47	28.15	39.76	1297	1963	2454	2126
500	500	216	350	350	520	715	1010	816	891	1114	965
24	24	9.13	15.35	15.35	23.03	32.09	45.28	2529	2780	3524	3029
600	600	232	390	390	585	815	1150	1148	1262	1600	1375

ASME CLASS 900 (PN 150)

Size *in/mm*	D	L			A	B	B1	Weight*(lb/kg)*			
		WAFER / UG	RF	BW				WAFER	LUG	RF	BW
6	6	4.02	10.51	10.51	10.63	15.75	25.98	196	269	341	264
150	150	102	267	267	270	400	660	89	122	155	120
8	8	5.51	11.5	11.5	12.4	19.69	29.53	414	449	555	485
200	200	140	292	292	315	500	750	188	204	252	220
10	10	6.1	13	13	14.37	19.88	31.5	513	566	720	617
250	250	155	330	330	365	505	800	233	257	327	280
12	12	7	14.02	14.02	15.75	22.83	35.83	740	815	1035	888
300	300	178	356	356	400	580	910	336	370	470	403
14	14	11.42	15	15	16.54	23.62	36.61	978	1064	1328	1101
350	350	290	381	381	420	600	930	444	483	603	500
16	16	12.2	15.98	15.98	17.91	27.17	38.98	1134	1222	1553	1300
400	400	310	406	406	455	630	990	515	555	705	590
18	18	13	17	17	19.88	27.17	41.93	1753	1910	2379	2048
450	450	330	432	432	505	690	1065	796	867	1080	930
20	20	13.78	18	18	21.06	28.74	42.5	2220	2416	3007	2599
500	500	350	457	457	535	730	1105	1008	1097	1365	1180
24	24	13.78	20	20	24.41	33.07	48.03	3916	4295	5425	4626
600	600	350	508	508	620	840	1220	1778	1950	2463	2100

The dimension and weights are for reference only and subject to change without notice.

Engineered Solutions

DIMENSIONS AND WEIGHTS (Triple Offset Type) *ASME CLASS 1500 (PN 250)*

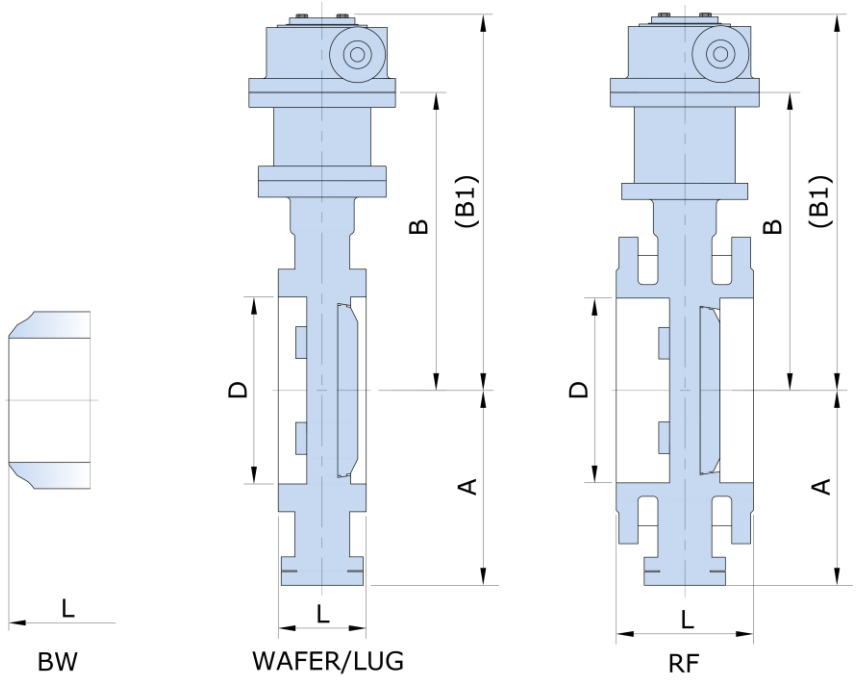

ASME CLASS 1500 (PN 250)

Size *in/mm*	D	L			A	B	B1	Weight *(lb/kg)*			
		WAFER / UG	RF	BW				WAFER	LUG	RF	BW
8	8	8.27	12.2	12.2	13.78	14.17	22.05	520	427	654	507
200	200	210	310	310	350	360	560	236	194	297	230
10	10	9.06	14.57	14.57	15.75	18.5	26.38	835	683	1066	881
250	250	230	370	370	400	470	670	379	310	484	400
12	12	10.63	16.14	16.14	17.72	20.47	30.71	1273	1040	1626	1344
300	300	270	410	410	450	520	780	578	472	738	610
14	14	11.42	17.72	17.72	18.9	24.41	32.68	1579	1267	2048	1498
350	350	290	450	450	480	620	830	717	575	930	680
16	16	13	19.3	19.3	21.26	27.56	36.22	2500	1993	3249	2599
400	400	330	490	490	540	700	920	1135	905	1475	1180
18	18	23.78	20.87	20.87	22.83	28.35	38.19	3011	2445	3859	3194
450	450	350	530	530	580	720	970	1367	1110	1752	1450
20	20	14.57	22.44	22.44	24	31.5	41.34	4163	5650	5242	4515
500	500	370	570	570	610	800	1050	1890	2565	2380	2050
24	24	16.14	25.6	25.6	27.56	49.21	63	6108	6108	7659	6806
600	600	410	650	650	700	1250	1600	2773	2723	3477	3090

The dimension and weights are for reference only and subject to change without notice.

FLOW COEFFICIENT CV VALUE

Triple Offset Type

Class 150 (PN 20)

Size In mm	Disc Opening Angle								
	10°	20°	30°	40°	50°	60°	70°	80°	90°
3 80	5	11	17	22	33	50	72	99	110
4 100	12	25	38	50	76	113	164	227	252
6 150	44	96	142	191	287	430	621	860	956
8 200	75	163	244	326	488	733	1058	1465	1628
10 250	124	270	405	541	811	1216	1757	2433	2703
12 300	249	542	813	1084	1627	2440	3524	4880	5422
14 350	287	624	936	1247	1871	2807	4054	5613	6237
16 400	380	826	1239	1652	2478	3717	5368	7433	8259
18 450	482	1049	1573	2097	3146	4719	6817	9438	10487
20 500	556	1209	1814	2419	3628	5442	7860	10884	12093
24 600	839	1825	2737	3650	5474	8212	11861	16423	18248
28 700	1371	2980	4470	5960	8940	13410	19370	26820	29800
30 750	1642	3570	5355	7140	10710	16065	23205	32130	35700
32 800	1886	4100	6450	8200	12300	18450	26650	36900	41000
36 900	2466	5360	8040	10720	16080	24120	34840	48240	53600
40 1000	3031	6590	9885	13180	19770	29655	42835	59310	65900
42 1050	3307	7190	10785	14380	21570	32355	46735	64710	71900
48 1200	4476	9730	14955	19460	21919	43785	63245	87570	97300

Class 300 (PN 50)

Size In mm	Disc Opening Angle								
	10°	20°	30°	40°	50°	60°	70°	80°	90°
3 80	5	11	17	22	33	50	72	99	110
4 100	12	25	38	50	76	113	164	227	252
6 150	35	77	116	154	231	347	502	694	772
8 200	68	148	222	296	444	666	962	1332	1480
10 250	110	238	357	476	715	1072	1548	2144	2382
12 300	164	355	533	711	1066	1600	2310	3199	3555
14 350	217	472	708	945	1417	2125	3070	4251	4723
16 400	306	665	998	1330	1995	2993	4323	5985	6650
18 450	396	861	1291	1722	2582	3874	5595	7747	8608
20 500	486	1056	1584	2112	3168	4752	6864	9504	10560
24 600	775	1685	2528	3370	5055	7583	10953	15165	16850
28 700	1118	2430	3645	4860	7290	10935	15795	21870	24300
30 750	1426	3100	4650	6200	9300	13950	20150	27900	31000
32 800	1546	3360	5040	6720	10080	15120	21840	30240	33600
36 900	1969	4280	6420	8560	12840	19260	27820	38520	42800
40 1000	2420	5260	7890	10520	15780	23670	24190	47340	52600

Class 600 (PN 100)

Size In mm	Disc Opening Angle								
	10°	20°	30°	40°	50°	60°	70°	80°	90°
3 80	5	11	17	22	33	50	72	99	110
4 100	12	25	38	50	76	113	164	227	252
6 150	44	96	142	191	287	430	621	860	956
8 200	75	163	244	326	488	733	1058	1465	1628
10 250	124	270	405	541	811	1216	1757	2433	2703
12 300	249	542	813	1084	1627	2440	3524	4880	5422
14 350	287	624	936	1247	1871	2807	4054	5613	6237
16 400	380	826	1239	1652	2478	3717	5368	7433	8259
18 450	482	1049	1573	2097	3146	4719	6817	9438	10487
20 500	556	1209	1814	2419	3628	5442	7860	10884	12093
24 600	839	1825	2737	3650	5474	8212	11861	16423	18248

CALCULATION OF FLOW COEFFICIENT

Flow coefficient Cv (Kv is the metric equivalent) is the rate of flow in gallon per minute with the pressure drop of 1 psi across the valve. The flow coefficients shown in the above table are determined with equations as follows:

For liquids:

$$Q_l = C_v(\Delta P/SG)^{1/2}$$

Where:
Q_l = Flow of liquid (gallon/minute)
ΔP = Pressure drop in psi (P_1-P_2)
SG = Specific gravity (1 for liquid)

For gases (non-critical):

$$Q_g = 61 \cdot C_v(P_2 \cdot P_1 / SG)^{1/2}$$

Where:
Q_g = Flow of gases (SFH at STP)
P_2 = Outlet pressure (psi)
P_1 = Inlet pressure (psi)
SG = Specific gravity (1 for gas)

Engineered Solutions

BUTTERFLY VALVE

OVERVIEW (Concentric Lining Type)

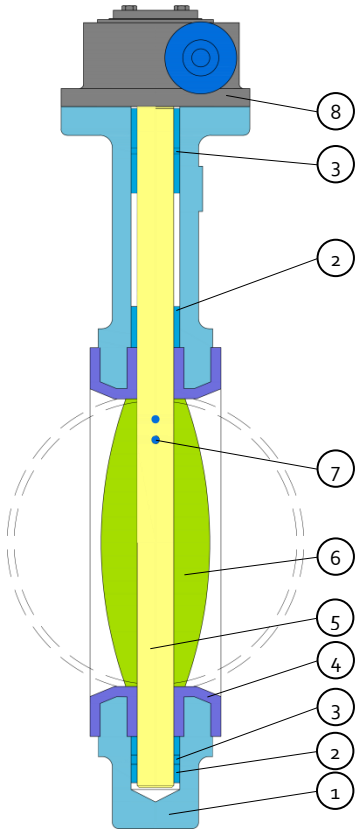

Part List

1. Body
2. Bushing
3. O-ring
4. Lining
5. Stem
6. Disc
7. Pin
8. Gear

STANDARDS

Design & Manufacture	API 609,AWWA C504, ASME b16.34
Face-to-face	API 609, ASME B16.10
End Dimension	ASME B16.5 (RF) ASME B16.47 (RF) MSS SP-44 (NPS 22 Only) AWWA A207
Test & inspection	API 598

TYPICAL MATERIALS

Body	Cast iron, A216 WCB, A351 CF3, CF8, CF3M, CF8M, A995 4A, 5A,Monel, Inconel, Hastelloy
Disc	Cast Iron+ENP, Carbon steel +ENP, A351 CF3, CF8, CF3M, CF8M, A995 4A, 5A,Monel, Inconel, Hastelloy
Lining	NBR, HNBR, EPDM,FKM, PTFE
Stem	A276 410, 304, 316, F51, AISI 4140+ENP, 17-4PH
Packing	NBR, HNBR, PTFE
O-ring	NBR, HNBR, FKM

Typical Concentric Lining Type Butterfly Valve

Wafer Type,
Rubber Liner

Wafer Type,
PTFE Liner

Lug Type,
Rubber Liner

Double Flange Type,
Rubber Liner

Mono-Flange Type
Rubber Liner

Rubber Concentric lined valve can be Bonded or Replaceable Liner.

DIMENSIONS AND WEIGHTS (Concentric Lining Type) *ASME CLASS 150 (PN 20)*

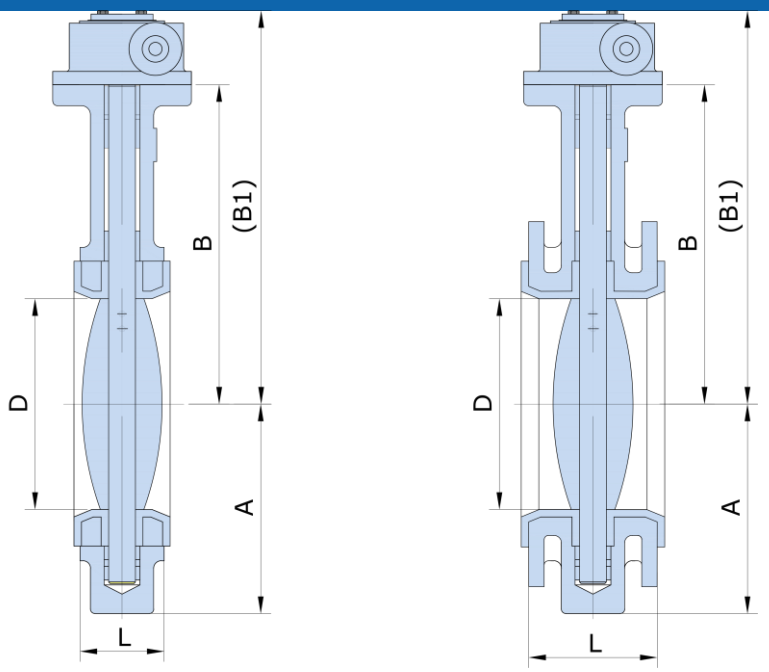

ASME CLASS 150 (PN 20)

Size *in/mm*	D	L		A	B	B1	Weight *(lb/kg)*	
		WAFER / LUG	RF				WAFER	*RF*
2 *50*	*1.97* *50*	*1.69* *43*	*4.25* *108*	*3.27* *83*	*4.72* *120*	*8.66* *220*	*11.45* *5.2*	*25* *11.2*
2 ½ *65*	*2.52* *64*	*1.81* *46*	*4.41* *112*	*3.66* *93*	*5.12* *130*	*13* *330*	*12.11* *5.5*	*29* *13.3*
3 *80*	*3* *76*	*1.89* *48*	*4.49* *114*	*3.94* *100*	*9.65* *245*	*13.98* *355*	*13.22* *6*	*31* *14.2*
4 *100*	*3.94* *100*	*2.05* *52*	*5* *127*	*4.5* *114*	*6.1* *155*	*10.63* *270*	*15.42* *7*	*38* *17.4*
6 *150*	*5.91* *150*	*2.2* *56*	*5.51* *140*	*5.63* *143*	*7.48* *190*	*11.81* *300*	*24.23* *11*	*56* *25.5*
8 *200*	*7.87* *200*	*2.36* *60*	*5.98* *152*	*6.69* *170*	*8.07* *205*	*12.6* *320*	*39.65* *18*	*87* *39.5*
10 *250*	*9.84* *250*	*2.68* *68*	*6.5* *165*	*7.8* *198*	*9.25* *235*	*15.75* *400*	*52.86* *24*	*117* *53*
12 *300*	*11.81* *300*	*3.07* *78*	*7.01* *178*	*8.78* *223*	*11.02* *280*	*17.72* *450*	*74.89* *34*	*148* *67*
14 *350*	*13.11* *333*	*3.07* *78*	*7.48* *190*	*11.02* *280*	*12.2* *310*	*19.69* *500*	*101.32* *46*	*200* *91*
16 *400*	*15.31* *389*	*4.02* *102*	*8.5* *216*	*11.81* *300*	*13.39* *340*	*20.87* *530*	*191.63* *87*	*311* *141*
18 *450*	*17.05* *433*	*4.5* *114*	*8.74* *222*	*13.58* *345*	*14.76* *375*	*22.83* *580*	*226.87* *103*	*401* *182*
20 *500*	*19.33* *491*	*5* *127*	*9.02* *229*	*19.98* *355*	*16.93* *430*	*24.8* *630*	*323.79* *147*	*441* *200*
24 *600*	*23.31* *592*	*6.06* *154*	*10.5* *267*	*16.14* *410*	*19.69* *500*	*30.71* *780*	*482.38* *219*	*639* *290*
28 *700*	*27.36* *695*	*6.5* *165*	*11.5* *292*	*18.82* *478*	*22.05* *560*	*31.5* *800*	*742.29* *337*	*943* *428*
32 *800*	*31.26* *794*	*7.48* *190*	*12.52* *318*	*20.83* *529*	*24.41* *620*	*31.89* *810*	*909.69* *413*	*1244* *565*
36 *900*	*34.02* *864*	*7.87* *200*	*13* *330*	*23* *584*	*26.18* *665*	*33.86* *860*	*1612.33* *732*	*1758* *798*
40 *1000*	*38* *965*	*9.88* *251*	*16.14* *410*	*24.5* *622*	*28.94* *735*	*36.22* *920*	*1911.89* *868*	*2026* *920*
48 *1200*	*45.67* *1160*	*10.87* *276*	*18.5* *470*	*31.5* *800*	*36.10* *917*	*43.7* *1110*	*2246.7* *1020*	*3084* *1400*
56 *1400*	*54.84* *1393*	*15.35* *390*	*20.87* *530*	*36.22* *920*	*48.43* *1230*	*59.06* *1500*	*4075* *1850*	*4405* *2000*

1. The dimension and weights are for reference only and subject to change without notice.
2. The outline dimension for pressure rating PN16 is equal to dimension for class 150 as described above.
3. For more dimensional information, please contact our sales representative.

Engineered Solutions

FLOW COEFFICIENT CV VALUE

Concentric Lining Type

Class 150 (PN 20)

Size In mm	Disc Opening Angle								
	10°	20°	30°	40°	50°	60°	70°	80°	90° Full open
2 *50*	0.1	5	12	24	45	64	90	125	135
2 1/2 65	0.2	8	20	37	65	98	144	204	220
3 *80*	0.3	12	22	39	70	116	183	275	302
4 *100*	0.5	17	36	78	139	230	364	546	600
5 125	0.8	29	61	133	237	292	320	930	1022
6 *150*	2	45	95	205	366	605	958	1437	1579
8 *200*	3	89	188	408	727	1202	1903	2854	3136
10 *250*	4	151	320	694	1237	2047	3240	4859	5340
12 *300*	5	234	495	1072	1911	3162	5005	7507	8250
14 *350*	6	338	715	1549	2761	4568	7230	10844	11917
16 *400*	8	464	983	2130	3797	6282	9942	14913	16388
18 *450*	11	615	1302	2822	5028	8320	13168	19752	21705
20 *500*	14	971	1674	3628	6465	10698	16931	25396	27908
24 *600*	22	1222	2857	5605	9989	16528	26157	29236	43116
28 *700*	30	1633	3522	7630	12599	20036	30482	46899	58696
32 *800*	45	2387	4791	8736	13786	20613	31395	48117	68250
36 *900*	60	3021	6063	11055	17449	26086	39731	60895	86375
40 *1000*	84	4183	8395	15307	24159	36166	55084	84425	119750
48 *1200*	102	4651	10365	17010	27242	43853	70431	108968	132888
60 *1500*	148	6400	14500	24500	39400	63200	102000	154000	190000
72 *1800*	190	8220	18600	31500	50700	81200	131000	198000	244000

SEAT AND SEAL MATERIAL *SELECTION GUIDE*

Seat Material Pressure-Temperature Rating (Operating)

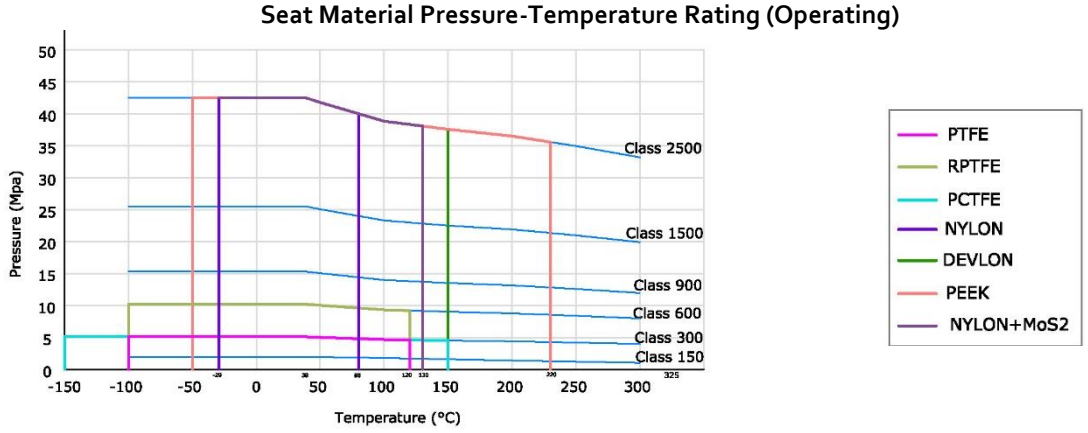

SEAT MATERIALS

Material Name	Description	Operating Temperature	Operating Pressure	Service Application
PTFE	Virgin PTFE is the most widely used sealing material with excellent characteristics suitable for most services. It has excellent chemical resistance throughout valve industries and low coefficient of frication.	-112°F – 248°F *-80°C– 120°C*	Class 150 *PN 20*	General chemicals, low pressure services.
RPTFE	RPTFE (Reinforced PTFE) is typically produced by adding 15% fiber glass to virgin PTFE. It has better pressure-temperature properties than virgin PTFE, better resistance to wear and deformation under load. **NOT to be used in hydrofluroic acid**	-112°F – 248°F *-80°C– 120°C*	Class 150 – 600 *PN 20 – 100*	For low and medium pressure services.
PCTFE	PCTFE is a homopolymer of chlorotrifluoroethylene, featuring high compressive strength and low deformation under load.	-320°F – 248°F -196°C– 120°C	Class 150 – 300 PN 20 – 50	For low temperature low pressure services.
Nylon 6	Nylon is a common seat material for Class 600 valves. It is highly resistance to many chemicals and abrasions, and can be used in air, oil and other gas media. **It is NOT suitable for strong oxidization agents.**	-22°F – 176°F *-30°C– 80°C*	Class 150 –1500 *PN 20 –250*	For high pressure, low temperature services.
Devlon®	Devlon® is a high molecular weight polyamide that is specifically tailored for high temperature/pressure applications in the offshore oil and gas sector. It is low moisture absorption.	-50°F – 302°F *-46°C– 150°C*	Class 150 –1500 *PN 20 –250*	For high pressure high temperature offshore services.
Nylon+MoS2	Molon (Nylon+MoS2) is a modified Nylon, the characteristics are similar to Devlon with it is cheaper than Devlon.	-20°F – 266°F *-29°C– 130°C*	Class 150 – 1500 *PN 20 – 250*	For high pressure, low temperature services.
PEEK	PEEK is a high performance engineered thermoplastic. It is excellent in water/chemical resistance andit is unaffected by continuous exposure to hot water/steam	-148°F – 500°F *-100°C– 260°C*	Class 150 – 2500 *PN 20 – 420*	For high pressure high temperature services.
PPL	PPL (Polyparaphenylene) is an excellent seat material with low coefficient of friction, highly resistant to pressure and temperature.	-50°F –482°F *-46°C– 250°C*	Class 150 – 300 *PN 20 – 50*	For high temperature low pressure services.
Delrin®	Delrin® (Acetal Resin) possesses high tensile strength, creep resistance and toughness. It exhibits low moisture absorption. It is chemically resistant to hydrocarbons, solvents and neutral chemicals.**DO NOT use it on oxygen service or steam.**	-50°F –194°F *-46°C– 90°C*	Class 150 – 600 *PN 20 –100*	For extreme pressure services.
TFM	TFM (modified PTFE) is a chemically modified PTFE that offers enhanced properties while retaining all the proven advantages of a conventional PTFE.	-112°F – 248°F *-80°C– 120°C*	Class 150 *PN 20*	For services requiring high purity.
Metal	Metal (typically stellite) seats are used in severe conditions where flashing, hydraulic shock, abrasive media or trapped metal may exist in the line.	Varies	Varies	For severe services.

O-RING MATERIALS

Material Name	Description	Operating Temperature	Operating Pressure
NBR	Buna-N (NBR) is an all purpose polymer with good resistance to water, solvents, oil and hydraulic fluids.	-50°F –176°F *-46°C– 80°C*	Class 150 – 600 *PN 20 –100*
HNBR	HNBR (Hydrogenated NBR) has similar media stability to NBR but with significantly better heat and oxidization stability.	-67°F – 337°F *-55°C–170°C*	Class 150 – 600 *PN 20 – 100*
Viton	Viton (fluorocarbon) is a fluorocarbon elastomer that is compatible with a broad range of chemicals. It performs well in mineral acids, salt solutions, chlorinated hydrocarbons and petroleum oils	-49°F – 320°F *-22°C– 204°C*	Class 150 – 600 *PN 20 – 100*
EPDM	EPDM has good abrasion and tear resistance with excellent chemical resistance to a variety of acids and alkalines. It is susceptible to attack by oil, strong acids and strong alkalines and should not be used in compressed air lines.	-50°F – 302°F *-46°C– 150°C*	Class 150 – 600 *PN 20 – 100*
FVMQ	Fluorosilcione is a silicone polymer chain with fluorinated side-chains for improved oil and fuel resistance. The mechanical and physical properties are very similar to those of silicone.	-50°F – 320°F *-46°C– 177°C*	Class 150 – 600 *PN 20 – 100*
AFLAS®	AFLAS® is highly resistant to a wide range of chemicals	-49°F – 428°F *-29°C– 220°C*	Class 150 – 600 *PN 20 – 100*

BUTTERFLY VALVE

VALVE FIGURE NUMBER — *HOW TO ORDER*

	Nominal Size		Valve Type		Pressure Rating	End Conn.	Construct-ion	Body Material		Trim Material		Seat	O-ring	Operation Mode
	A		B		C	D	E	F		G		H	I	J
e.g.	1	6	B	U	3	W	3	C	4	0	1	M	1	G

is a NPS 16 Class 300, Butterfly Valve, Wafer Type, Triple Offset, A216 WCB body, 13Cr Trim, Viton O-ring, Gear Operated.

A Nominal Size

00	Special	**02**	2 (DN 50)	**07**	8 RB	**19**	20 RB	**31**	32 RB
F1	3/8 (DN 10)	**R2**	2 RB	**08**	8 (DN 200)	**20**	20 (DN 500)	**32**	32 (DN 800)
F2	1/2 (DN 15)	**F6**	2 ½ (DN 65)	**09**	10 RB	**21**	22 RB	**33**	34 RB
0R	1/2 RB	**3R**	2 ½ RB	**10**	10 (DN 250)	**22**	22 (DN 550)	**34**	34 (DN 850)
F3	3/4 (DN 20)	**03**	3 (DN 80)	**11**	12 RB	**23**	24 RB	**35**	36 RB
R0	3/4 RB	**R3**	3 RB	**12**	12 (DN 300	**24**	24 (DN 600)	**36**	36 (DN 900)
01	1 (DN 25)	**04**	4 (DN 100)	**13**	14 RB	**25**	26 RB	**37**	38 RB
R1	1 RB	**R4**	4 RB	**14**	14 (DN 350)	**26**	26 (DN 650)	**38**	38 (DN 950)
F4	1 ¼ (DN 32)	**05**	5 (DN 125)	**15**	16 RB	**27**	28 RB	**39**	40 RB
1R	1 ¼ RB	**R5**	5 RB	**16**	16 (DN 400)	**28**	28 (DN 700)	**40**	40 (DN 1000)
F5	1 ½ (DN 40)	**06**	6 (DN 150)	**17**	18 RB	**29**	30 RB	**41**	42 RB
2R	1 ½ RB	**R6**	6 RB	**18**	18 (DN 450)	**30**	30 (DN 750)	...	More as such

B Valve Type

BU	Butterfly Valve

C Pressure Rating

0	Special	**7**	Class 2500
1	Class 150	**9**	Class 900
3	Class 300	**8**	Class 800
5	Class 1500	**2**	Class 125(PN16)
6	Class 600	**4**	Class 400(PN64)

D End Connection

X	Special	**B**	Butt-Weld (BW)
R	RF Flanged	**S**	Socket-Weld (SW)
J	RTJ Flanged	**W**	Wafer
F	FF Flanged	**L**	Lug
T	Threaded		

E Construction

1	Concentric
2	Double Offset
3	Triple Offset

F Body Material

Xo	Special	**M9**	A182 F22 CL 3	**L5**	A350 LF3	**S6**	A351 CF8M
C1	A105	**Mo**	A217 WC9	**L6**	A352 LC3	**S7**	A182 F316L
C2	A216 WCA	**E1**	A182 F5	**L7**	A350 LF5	**S8**	A351 CF3M
C4	A216 WCB	**E2**	A217 C5	**L8**	A352 LCB	**S9**	A182 F347
C6	A216 WCC	**E4**	A217 C6	**L9**	A350 LF6	**So**	A351 C F8C
M1	A182 F1	**E5**	A182 F9	**LA**	A350 LF9	**D1**	A182 F51
M2	A217 WC1	**E6**	A217 C12	**LB**	A352 LC9	**D2**	A995 4A
M3	A182 F2	**E7**	A182 F91	**LD**	A352 LCC	**D3**	A182 F53
M4	A217 WC4	**E8**	A217 C12A	**S1**	A182 F304	**D4**	A995 5A
M5	A182 F12 CL 2	**L1**	A350 LF1	**S2**	A351 CF8	**D5**	A182 F55
M6	A217 WC5	**L2**	A352 LCA	**S3**	A182 F304L	**D6**	A995 6A
M7	A182 F11 CL 2	**L3**	A350 LF2	**S4**	A351 CF3		
M8	A217 WC6	**L4**	A352 LC2	**S5**	A182 F316		

G Trim Material

00	Special
01	13Cr/13Cr
02	304/13Cr
03	316/13Cr
04	304/304
05	316/316
06	316/17-4PH

G Seat

E	EPDM
T	PTFE
R	RPTFE
C	13Cr+Composite
S	SS304+Composite
G	SS316+Composite

I O-Ring

0	None
1	Viton
2	Teflon
3	HNBR
4	NBR
5	Special
6	EPDM
7	FVMQ
8	FFKM
9	AFLAS

J Operation

B	Bare Stem
L	Lever
G	Gearbox
P	Pneumatic
E	Electric
C	Gear w/ Chain
N	Pneumatic-Hydraulic
S	Solid Lever
D	Lever with locking device
R	Solid lever with locking device

Engineered Solutions

HOW THE FIGURE NUMBER SYSTEM WORKS

Introduction. Figure number system uses a code consisting 14 digits of letters and numbers to represent the specification of a valve of certain specification. Among 14 digits, they are separated into 10 groups identified by letters from A to J. Each group represents a parameter of a valve, together they contain almost all the essential parameters of the valve.

Uses. Using the figure number system to generate a code is easy. Under each group, the code is shown on the left while on the right is the meaning of the code. Start by selecting a code from group A, through group J. If the specification of the valve is not listed, select the code for "Special ". The total length of the figure number shall be exactly 14 digits.

Cautions. It is advised that you have as detailed the specification as possible to generate a figure number, which means eliminating "Specials". If you don't have enough specification or information about the valve you are ordering, or you're not sure how to use the system to generate a figure number, contact one of our sales representatives for help.

Note: FBV reserves the right to make any modifications without notice.

Offshore

Pipeline

Engineered Solutions®

Onshore

Refinery

IMPORTANT NOTICE

- All dimensions in inches not listed in standards are converted from millimeters. Weights in lbs (pounds) are converted from kilograms.
- Data listed in the catalog, including dimensions, weights, specifications and other valve related data are intended to provide general information and guidance only.
- FBV Inc. assumes no responsibility for errors or inadequacy relevant to any information provided in this catalog. Any information provided in this catalog is subject to change without notice.

2121 Brittmoore Rd Suite 4000
Houston, TX 77043 USA

T 832-203-5459
F 832-203-5461

E sales@fbvalve.com

www.fbvalve.com

©FBV Inc. All rights reserved.